INTELLIGENT BLUETOOTH LOCKING SYSTEMS

OCS®SMART

MAIN FEATURES

- ✓ Dual technology: Smartphone use or keypad, as you please.
- ✓ Maintenance App for Functionality Management: fixed, free, groups via App, rental.
- ✓ Rental mode: Configurable by locks in intervals of 15 minutes.
- ✓ Automatic Opening.
- ✓ Long battery life.
- ✓ External power override for emergency opening.
- ✓ Ojmar user App or ready to go SDK to integrate into the building app.

ojmar®

INTELLIGENT LOCKING SYSTEMS

Bluetooth®

GET IT ON Google Play

Download on the App Store

INTELLIGENT BLUETOOTH LOCKING SYSTEMS

OCS®SMART

TECHNICAL SPECIFICATIONS

Authentication method	> Code and Bluetooth
Reading distance	> Up to 1 m (between phone and lock)
Communication standard	> Bluetooth
Batteries (Type and quantity)	> 4 VARTA Type AA alkaline batteries
Battery Life	> Up to 5 years at room temperature (depending on use and configuration)
Front handle dimensions	> 119 mm x 62 mm x 8 mm
Weight	> 453 g (E-17.5 long screws) > 481 g (E-30 long screws)
Lock strength	> 1000 N
Finish	> Silver RAL 9006 > Graphite Pantone 8405 > White AP-2101 DAYSALUX 554
Temperature	> From -10 °C to 42 ºC (indoors)
Humidity	> < 97 % (Non-condensing)
Protection	> IK09 / IP56

OTHER DATA

Door material	> Laminate > Glass > Metal > HPL laminate > Melamine
Door thickness	> < 28mm
Availability	> Right/Left (Same lock) E-17.5 and E-30

ACCESSORIES

> Maintenance App
> Emergency key
> Battery change key

ASSEMBLY

OCS®SMART E-17,5

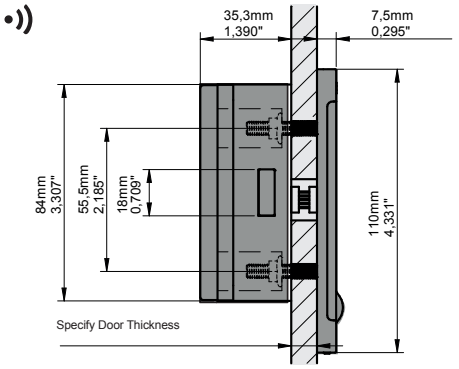

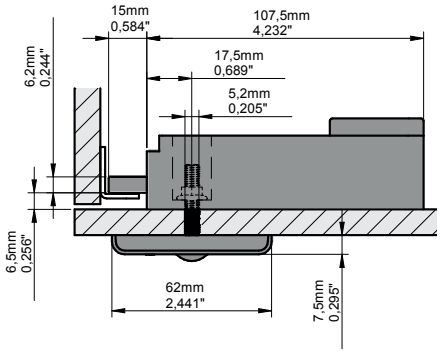

OCS®SMART E-30

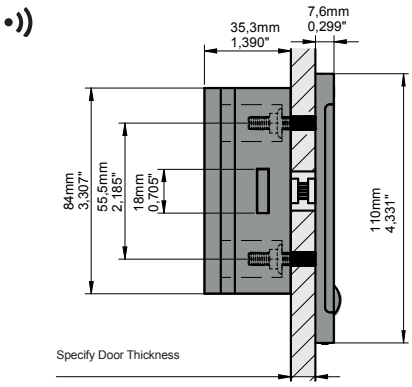

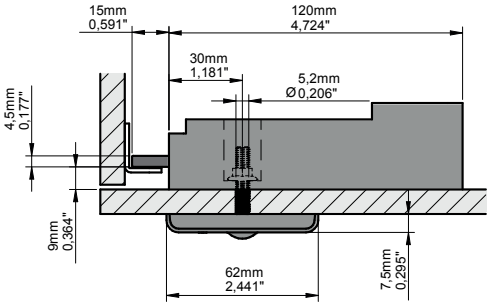

ASSEMBLY

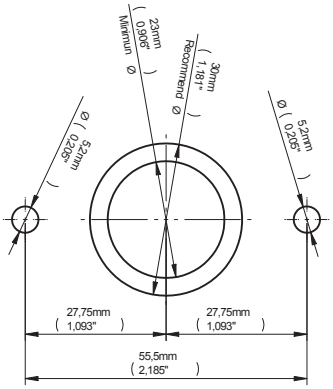

AVAILABILITY

Right/Left (Same lock) E-17.5 and E-30

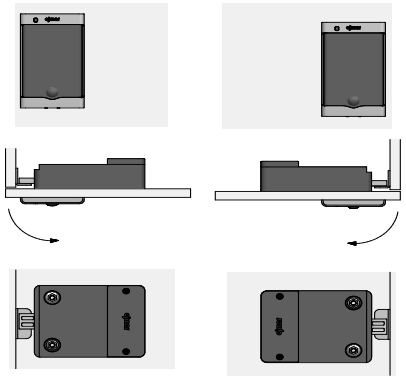

ojmar®
INTELLIGENT LOCKING SYSTEMS

CONTACT
E. sales@ojmar.com
T. +34 943 748484

OJMAR S.A.
Polígono Industrial de Lerun, s/n
20870 Elgoibar · Spain

www.ojmar.com

REF: OCS SMART V1